EXPLODED VIEW AND PART LIST

THE PART L IST OF CAB INET ASS EMBLY

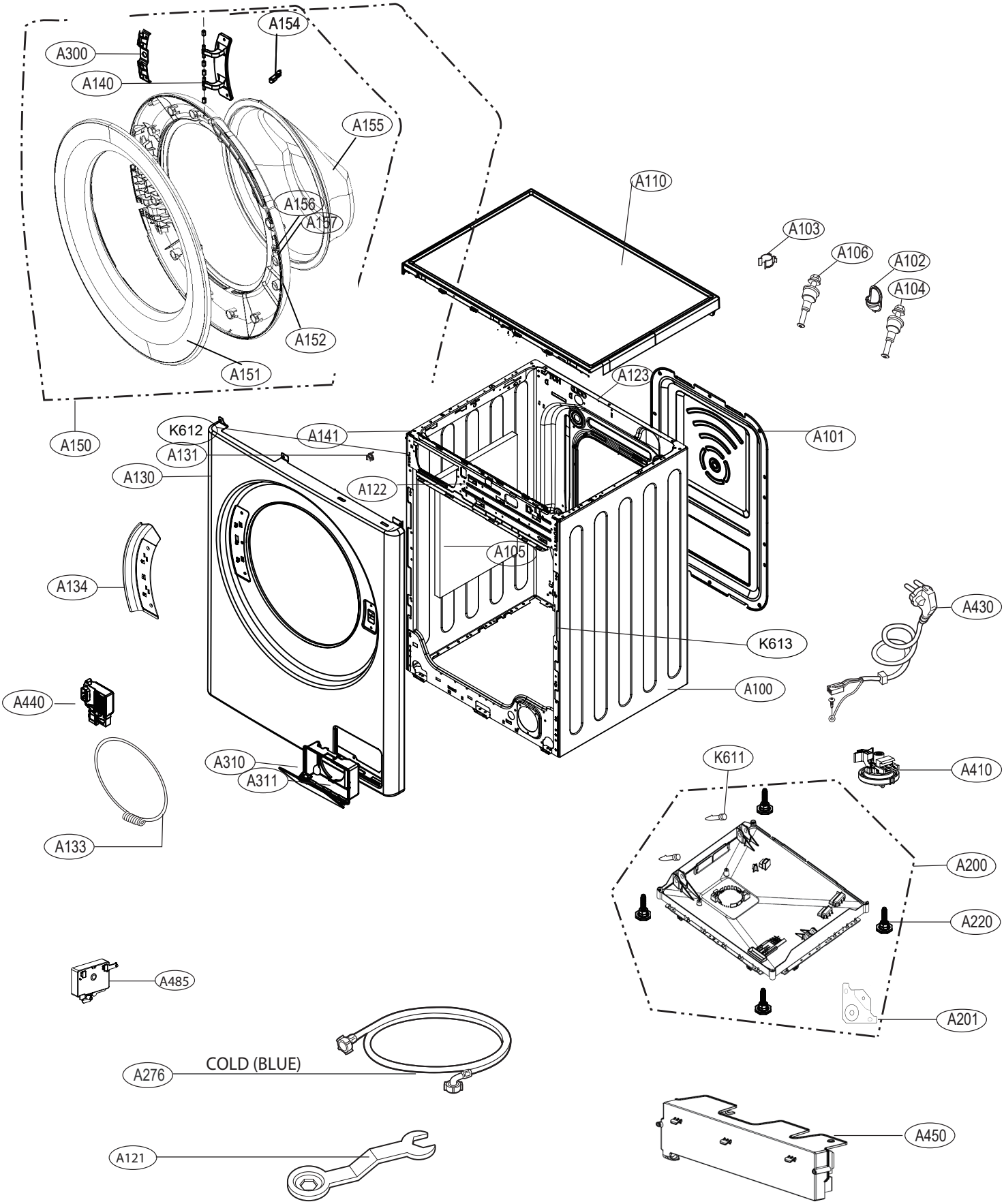

THE EXPLODED VIEW OF CONTROLANEL & DISPENSER ASSEMBLY

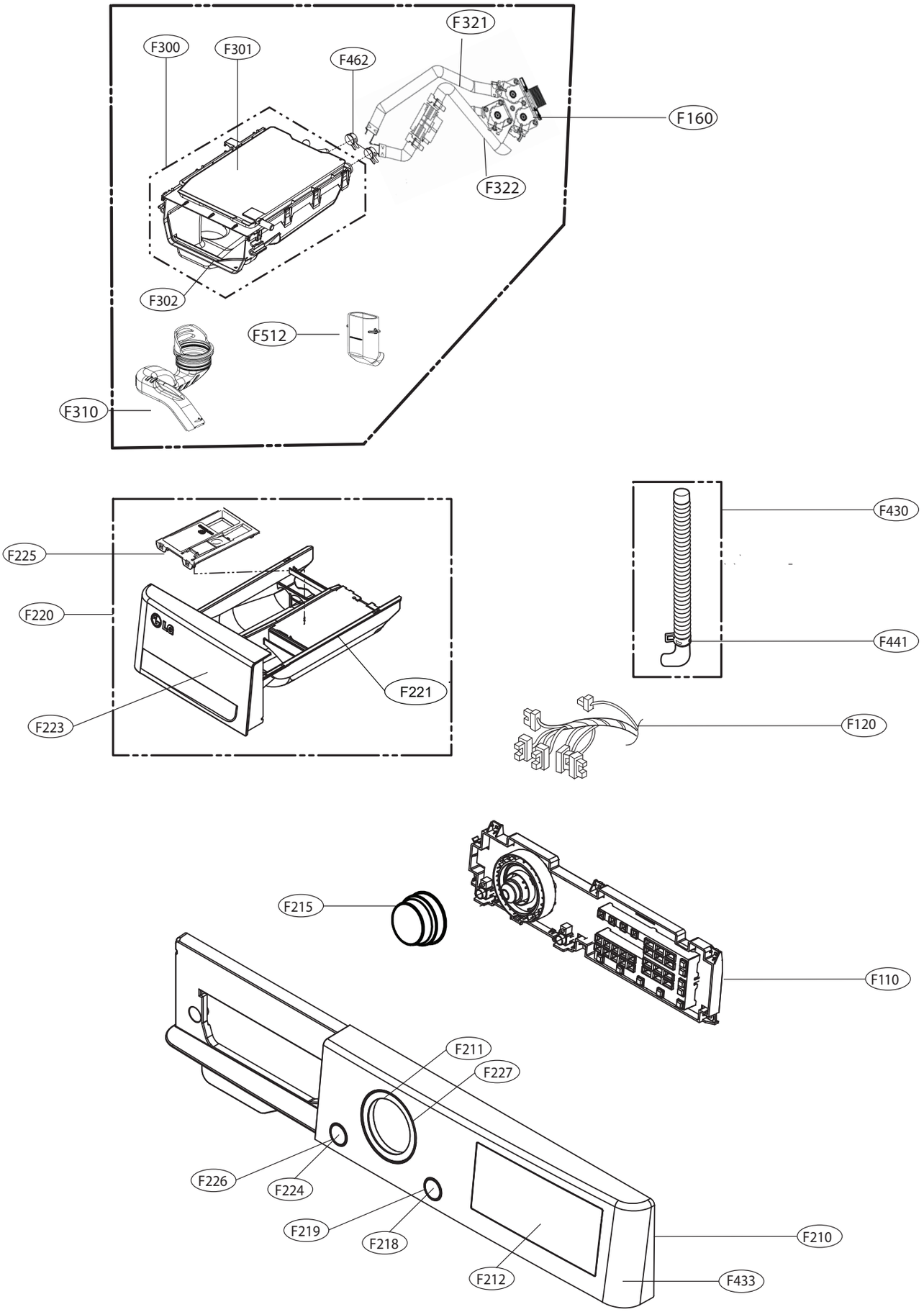
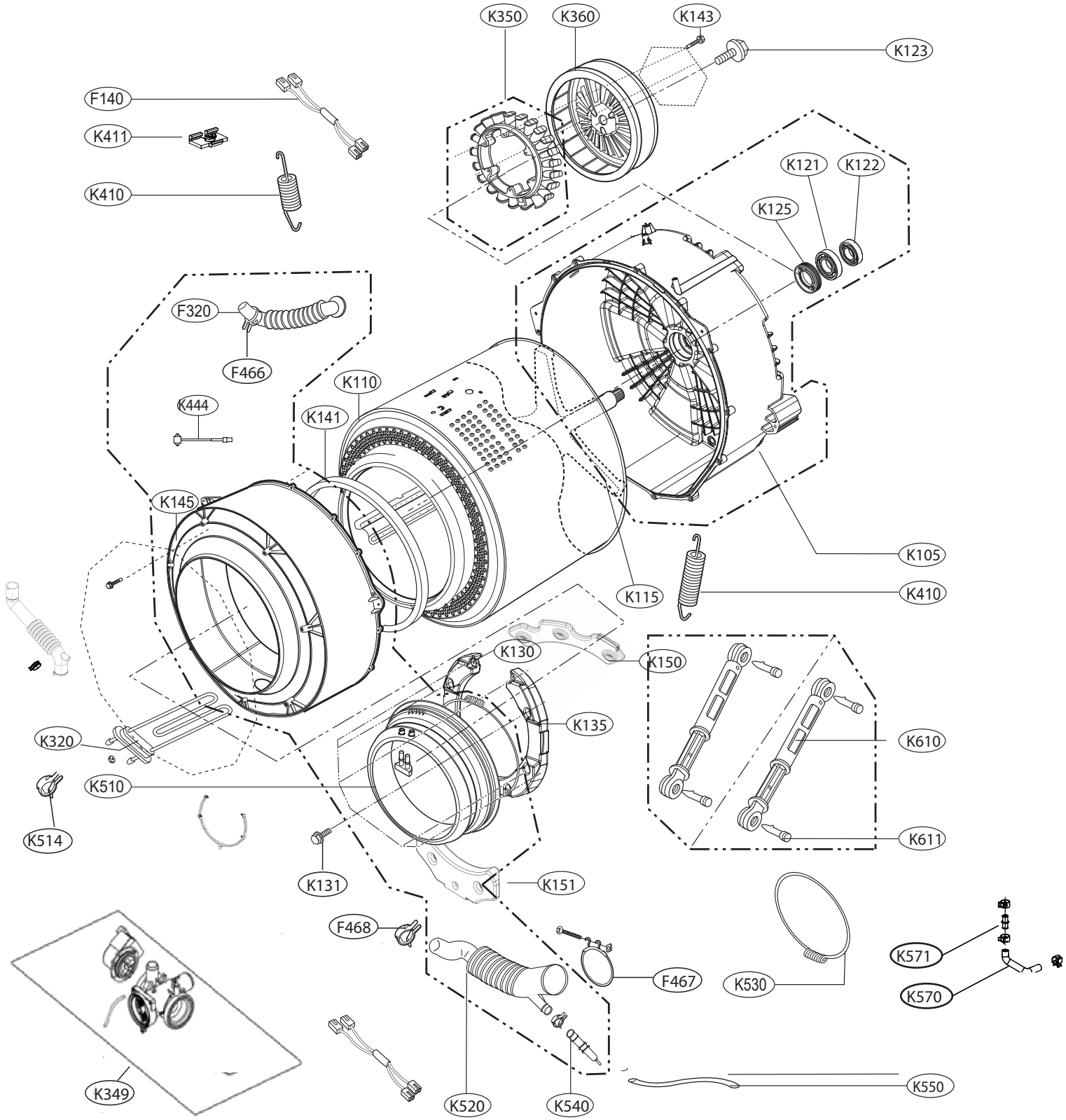
THE EXPLODED VIEW OF DRUM & TUB ASSEMBLY